LIANCHAO FUTURE TECHNOLOGY CO LTD
Tel.: +86(755)33845126 **Fax:** +86(755)33925086
Web: www.cn-lcf.com www.cn-lcf.net

JPEG Serial Camera Module

OV528 Protocol

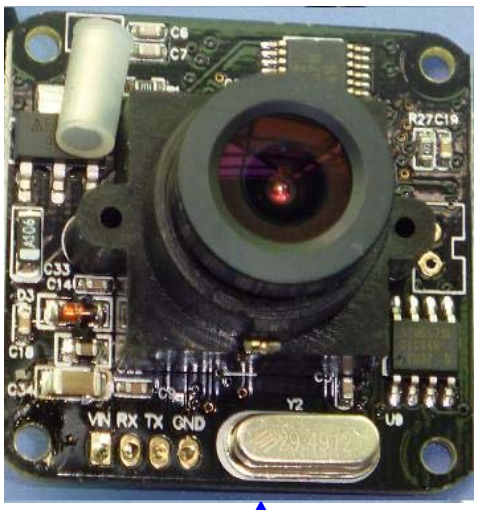

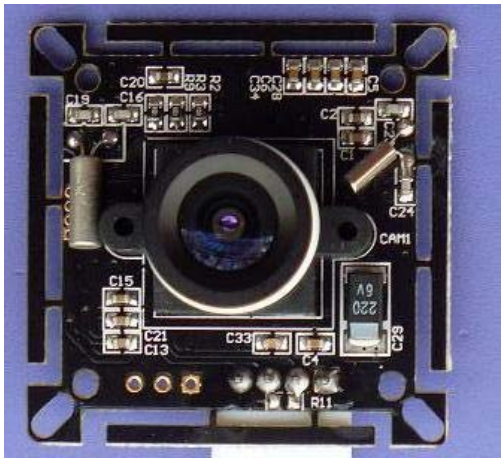

LCF-23M1 32mmx32mm
or 38mmx38mm

Default baudrate 9600bps~115200 bps

LCF-23MA 32mm-38mm

Auto adaptive 9600bps~115200 bps

OV528 PROTOCOL

1.General Description

RS232/TTL/RS485 module is a highly integrated serial camera board that can be attached to a wireless or PDA,host performing as a video camera or a JPEG compressed still camera. It provides a serial interface

(RS-232) and JPEG compression engine to act as a low cost and low powered camera

module for high resolution serial bus security system or PDA accessory applications.

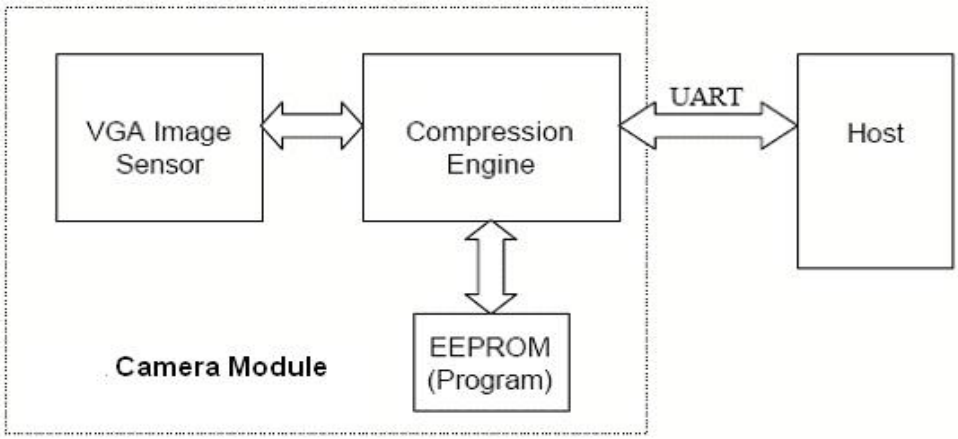

Figure 1 – System Block Diagram

2. Features

Small in size, low cost and low powered (3.3V/5.0V)camera module for high

resolution serial bus security system or PDA accessory applications.

On-board EEPROM provides a command based interface to external host via RS-232.

UART: 115.2Kbps for transferring JPEG still pictures or 160x128 preview @8bpp with 0.75fps.

On board OmniVision OV7640/8/7725 color sensor.

Built-in JPEG CODEC for different resolutions.

Built-in down sampling, clamping and windowing circuits for VGA, QVGA, 160x120 or 80x60 image resolutions.

No external DRAM required.

3.Serial Interface

1 2 3 4

1	2	3	4
+5V	RXD	TXD	GND

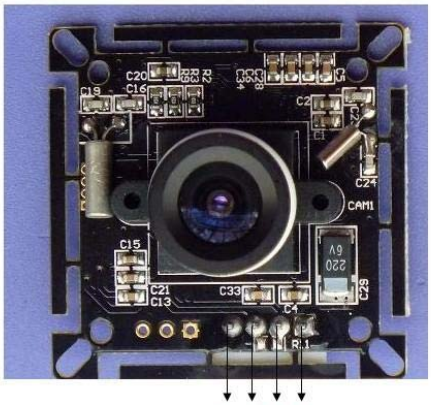

1 2 3 4

1	2	3	4
GND	TXD(OUT)	RXD(IN)	+5V

Name	**descriptions**
+5V	Power
GND	Ground
TXD（OUT）	RS232 level connected to MCU or PC RXD
RXD（IN）	RS232 level connected to MCU or PC TXD

1. Single Byte Timing Diagram

A single byte RS-232 transmission consists of the start bit, 8-bit contents and the stop bit. A start bit is always 0, while a stop bit is always 1. LSB is sent out first and is right after the start bit.

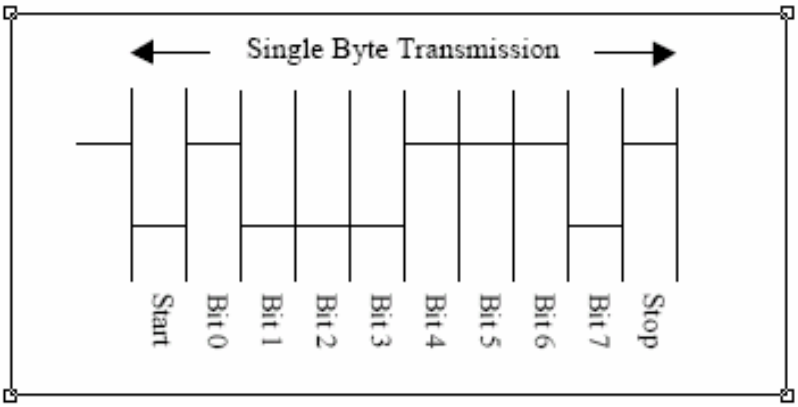

Figure 3 – RS-232 single byte timing diagram

2. Command Timing Diagram

A single command consists of 6 continuous single byte RS-232 transmissions. The following is an example of SYNC (AA0D00000000h) command.

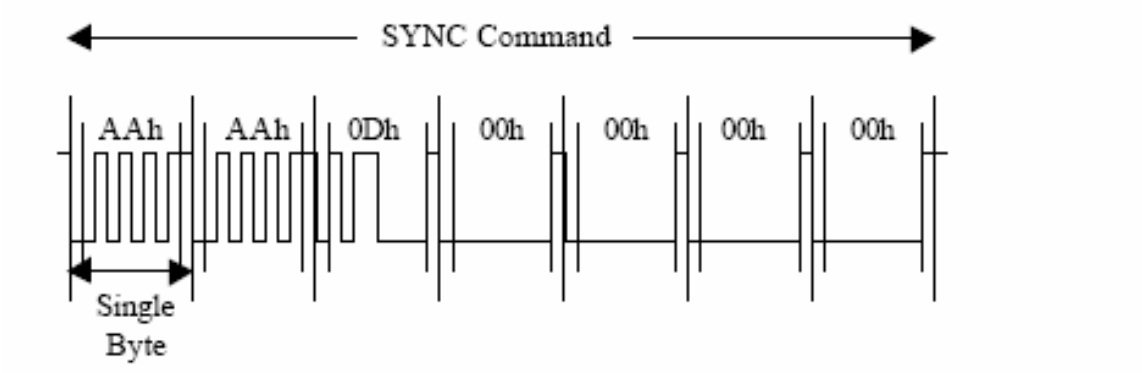

Figure 4 – RS-232 SYNC command timing diagram

4.Command Set

The RS232 module supports total 11 commands for interfacing to host as following:

Command	ID Number	Parameter 1	Parameter 2	Parameter 3	Parameter 4
Initialise	AA01h	00h	Color Type	Preview Resolution	JPEG Resolution
Get Picture	AA04h	Picture Type	00h	00h	00h
Snapshot	AA05h	Snapshot Type	Skip Frame Low Byte	Skip Frame High Byte	00h
Set Packet Size	AA06h	08h	Packet Size Low Byte	Packet Size High Byte	00h
Set Baud rate	AA07h	1st Divider	2nd Divider	00h	00h
Reset	AA08h	Reset Type	00h	00h	xxh*
Power Off	AA09h	00h	00h	00h	00h
Data	AA0Ah	Data Type	Length Byte 0	Length Byte 1	Length Byte 2
SYNC	AA0Dh	00h	00h	00h	00h
ACK	AA0Eh	Command ID	ACK counter	00h/Packat ID Byte 0	00h/Packet ID Byte 1
NAK	AA0Fh	00h	NAK counter	Error Number	00h

* If the parameter is 0xFF, the command is a special Reset command and the firmware responds to it immediately.

1. Initialise (AA01h)

The host issues this command to configure the preview image size and color type. After receiving this command, the module will send out an ACK command to the host if the configuration success. Otherwise, an NACK command will be sent out.

1.1 JPEG Resolution

Since the Embedded JPEG Code can support only multiple of 16, the JPEG preview mode can support following image sizes. It is different from normal preview mode.

80x60	01h
160x120	03h
320x240	05h
640x480	07h

2. Get Picture (AA04h)

The host gets a picture from RS232 by sending this command.

2.1 Picture Type

Snapshot Picture	01h
Preview Picture	02h
JPEG Preview Picture	05h

3. Snapshot (AA05h)

RS232 keeps a single frame of JPEG still picture data in the buffer after receiving this command.

3.1 Snapshot Type

Compressed Picture	00h

3.2 Skip Frame Counter

The number of dropped frames can be defined before compression occurs. “0” keeps the current frame, “1” captures the next frame, and so forth.

4. Set Packet Size (AA06h)

The host issues this command to change the size of data packet which is used to transmit image data from the RS232 to the host. This command should be issued before sending Snapshot command or Get Picture command to RS232. It is noted that the size of the last packet varies for different image.

4.1 Packet Size

The default size is 64 bytes and the maximum size is 512 bytes.

Byte0 Byten

ID (2 bytes)	Data Size (2 bytes)	Image Data (Packet Size – 6 bytes)	Verify Code (2 bytes)

ID -> Packet ID, starts from zero for an image

Data Size -> Size of image data in the packet

Verify Code ->Error detection code, equals to the lower byte of sum of the Whole package data except the verify code field. The higher byte of this code is always zero. i.e. verify code=low byte(sum(byte<0>to byte<N-2>).

5. Set Baud Rate (AA07h)

Set the RS232 baud rate by issuing this command. As the default baud rate is

Seted according to clients request, host should make connection with RS232 at this baud rate each time power on.

5.1 Baud rate Divider

Baud rate = 14.7456MHz / 2 x (2nd Divider + 1) / 2 x (1st Divider + 1)

Baud rate	**1st**	**2nd**	**Baud rate**	**1st**	**2nd**
7200 bps	Ff	01	28800 bps	3fh	01
9600 bps	Bfh	01	38400 bps	2fh	01
14400 bps	7fh	01	57600 bps	1fh	01
19200 bps	5fh	01	115200 bps	0fh	01

6. Reset (AA08h)

The host reset RS232 by issuing this command.

6.1 Reset Type

00h	Resets the whole system. RS232 will reboot and reset all registers and
01h	Resets state machines only

7. Power Off (AA09h)

RS232 will go into sleep mode after receiving this command. SYNC command (AA0Dh) must be sent to wake up RS232 for certain period until receiving ACK command from RS232.

8. Data (AA0Ah)

RS232 issues this command for telling the host the type and the size of the image data which is ready for transmitting out to the host.

8.1 Data Type

Snapshot Picture	01
Preview Picture	02
JPEG Preview	05

8.2 Length

These three bytes represent the length of data of the Snapshot Picture, Preview Picture or JPEG Preview Picture.

9. SYNC (AA0Dh)

Either the host or the RS232 can issue this command to make connection. An ACK command must be sent out after receiving this command.

10. ACK (AA0Eh)

This command indicates the success of last operation. After receiving any valid command, ACK

command must be sent out except when getting preview data. The host can issue this command

to request image data packet with desired packet ID after receiving Data command from RS232. The host should send this command with packet ID F0F0h after receiving a packet to end the packet transfer. Note that the field "command ID" should be 00h when request image data packet.

10.1Command ID

The command with that ID is acknowledged by this command.

10.2ACK Counter

No use.

10.3 Packet ID

For acknowledging Data command, these two bytes represent the requested packet ID. While for acknowledging other commands, these two bytes are set to 00h.

11. NAK (AA0Fh)

This command indicates corrupted transmission or unsupported features.

11.1 NAK Counter

No use.

11.2 Error Number

Picture Type Error	01	Parameter Error	0b
Picture Up Scale	02	Send Register Timeout	0c
Picture Scale Error	03	Command ID Error	0d
Unexpected Reply	04	Picture Not Ready	0fh
Send Picture Timeout	05	Transfer Packet Number	10
Unexpected Command	06	Set Transfer Packet Size	11
SRAM JPEG Type	07	Command Header Error	F0
SRAM JPEG Size Error	08	Command Length Error	F1
Picture Format Error	09	Send Picture Error	F5
Picture Size Error	0a	Send Command Error	Ffh

5.Command Protocol

A. SYNC Command

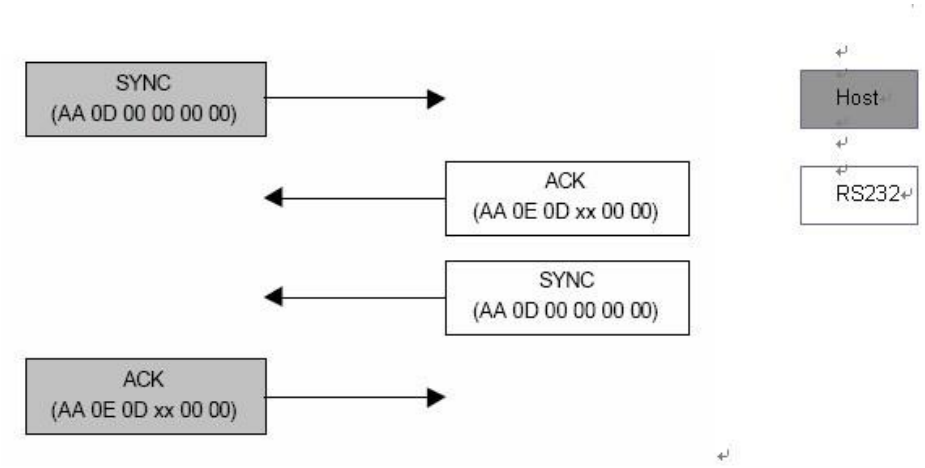

B. Make Connection with RS232

Send the SYNC command (at 115200bps) until receiving ACK command from RS232 (usually an ACK command is receive after sending 25 times of SYNC command). This must be done after Power up.

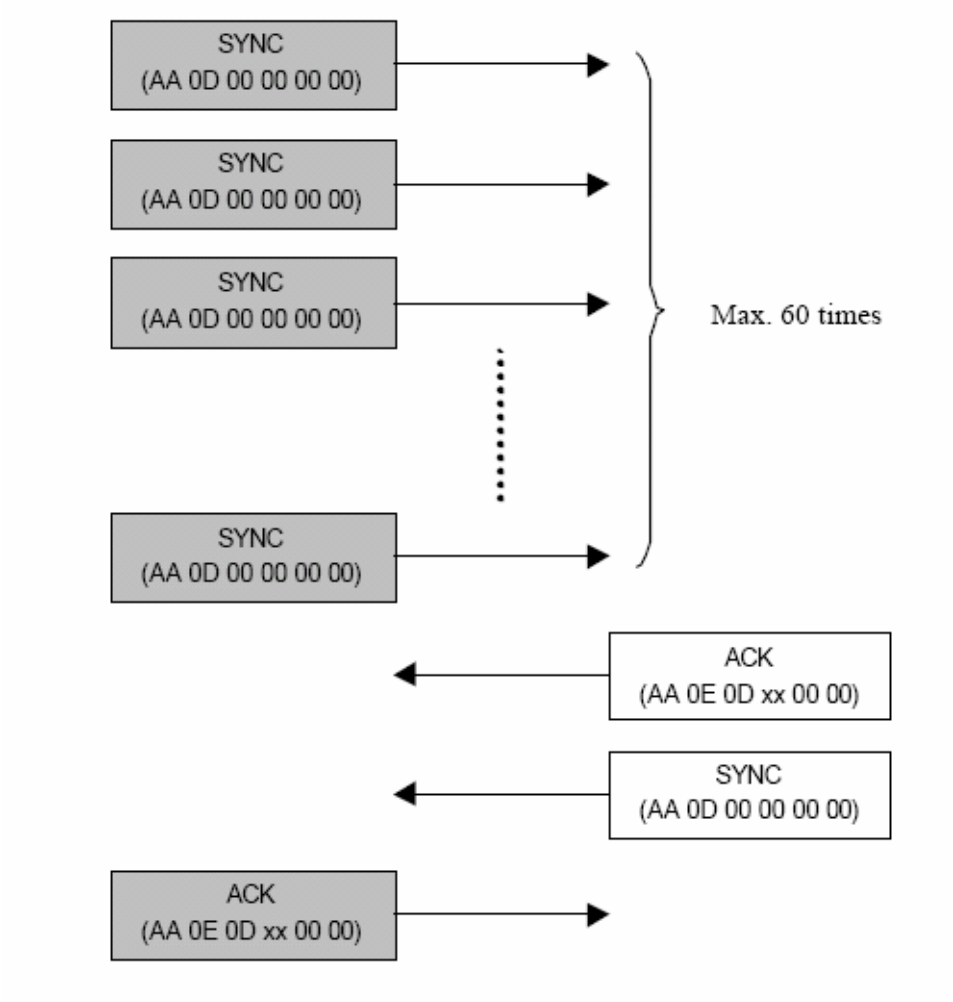

C. Initial, Get Picture, Snapshot, Set Packet Size, Set Baudrate, Reset and Power Off Command

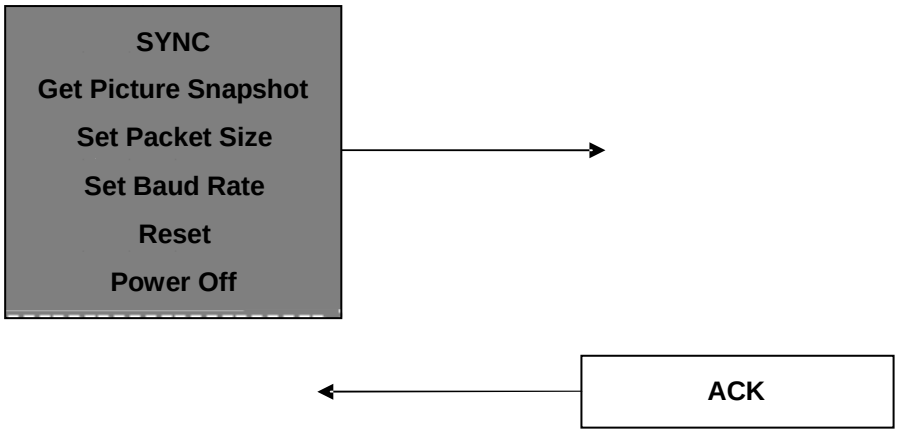

D. Getting a Snapshot JPEG Picture for RS232

Make sure connection is made before the following communication.

JPEG Snapshot Picture (e.g. 640x480 VGA format)

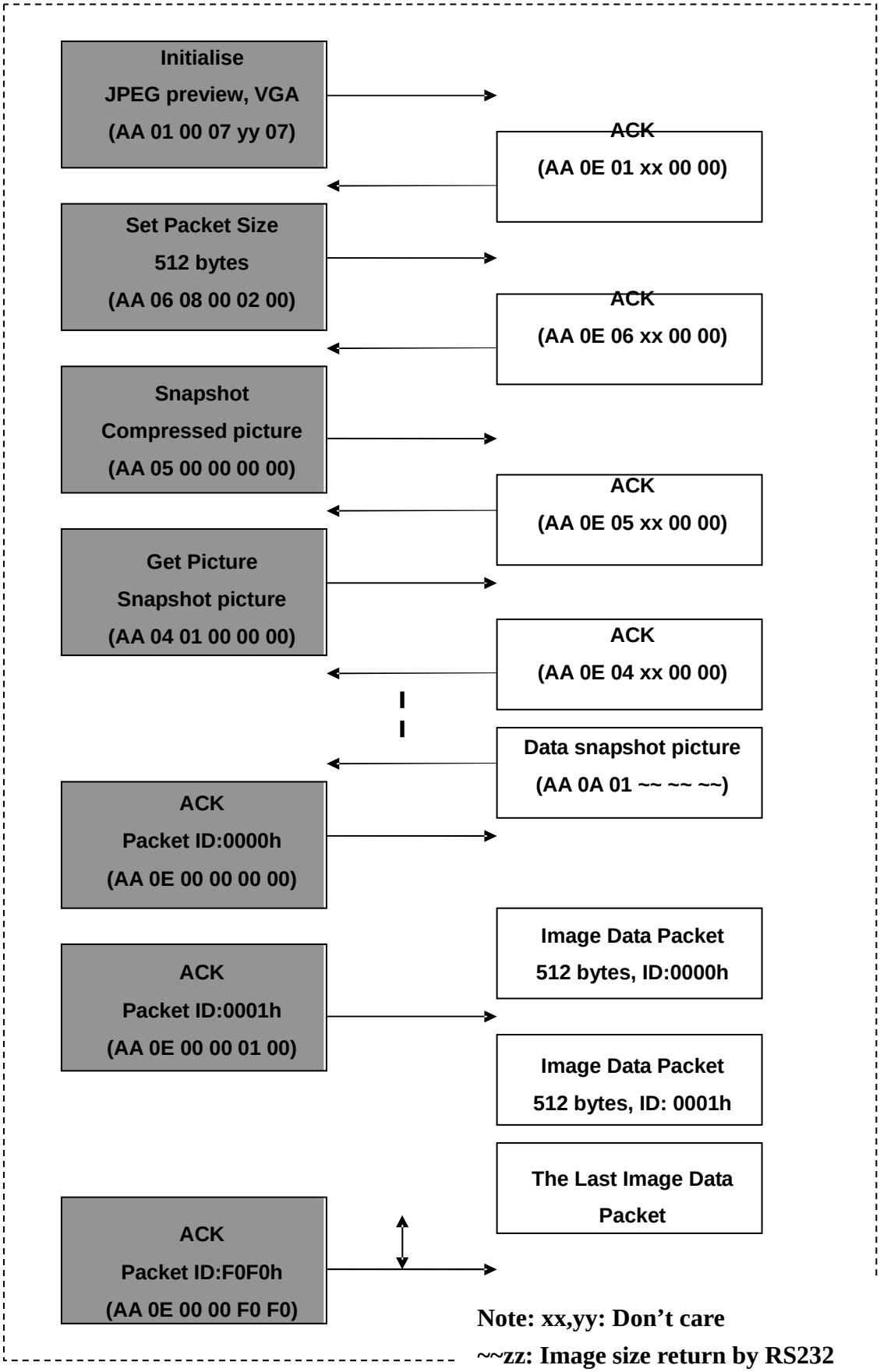

Note: xx,yy: Don't care
~~zz: Image size return by RS232

6.Photo Taken from Serial Camera/Camera module

A. At Day

B. At Night or Dark Environment

BRIEF OPERATION INSTRUCTION

The following values are Hex unless special instruction. XX means careless values, after power on, delay 3 seconds.

A. SYNC

1. Host SYNC Camera

Host:	AA	0D	00	00	00	00

Host send this command within 50 times, interval time is 0.1s, until the camera replies. More than 50times, failed. Send one SYNC command, it can connect with camera.

2. Camera Reply

Camera:	**AA**	**0E**	**0D**	**XX**	**00**	**00**

3. Camera SYNC Host

Camera:	AA	0D	00	00	00	00

4. Host Reply

Host:	**AA**	**0E**	**0D**	**00**	**00**	**00**

B. Change baud rate

host:	AA	07	B1	B2	00	00

B1=0x0f B2=0x01 115200
B1=0x1f B2=0x01 57600
B1=0x2f B2=0x01 38400
B1=0x3f B2=0x01 28800
B1=0x5f B2=0x01 19200
B1=0x7f B2=0x01 14400
B1=0xBf B2=0x01 9600

Camera reply in the baud rate which was not changed

Camera:	AA	0E	07	XX	00	00

C. Take pictures：

1.Host send command to start take photos

Host：	AA	04	05	00	00	00

2. Getting the above command, camera reply:

Camera	AA	0E	04	XX	00	00

3. Camera begin to take photos, and then send this command to tell the host the data length, for this step, to set overtime latency time,5s is better.

Camera：	AA	0A	04	L	H	00

L is lower byte of image data length, H is higher byte of image data length.
The data is divided into several packet, default packet length is 506(maybe 512) (image data is 506-6)byte, host can read only one packet each time.

4. Read photos:
Host send:

Host：	AA	0E	00	00	ID（L）	ID（H）

Host send this command to request the camera to transmit the data
ID is serial number of packet, begin from 0,ID（L）is lower byte，ID（H）is higher byte.
Camera reply

Camera：	ID（L）	ID（H）	P（L）	P（H）	Image data	Verify code	00

ID (L) ID(H) has the same meaning with above one. P(L) P(H) means packet length, host will calculate how much packet it will read according to the length in step 3,repeat step 4 until get all
Packet.
Verify: eg. verify code=low byte(sum(byte<0>to byte<N-2>).
When host is in the process of transmission, if an error, can request the camera to transmit one packet again. Host finish getting last one packet, send one end command.

Host：	AA	0E	00	00	F0	F0

Camera can not reply this command.

D. Set image resolution

Host:	AA	01	00	07	00	N

N＝3：160×120
N＝5：320×240
N＝7：640×480

Reply

Camera:	AA	0E	01	XX	00	00

Contact information:

Email: felix@cn-lcf.com amos@cn-lcf.com ailsa@cn-lcf.com

MSN: felixlcf@hotmail.com amoslcf@hotmail.com ailsalcf@hotmail.com

SKYPE: amoslcf